Portable Nano-Particle Emission Measurement System

EUROPEAN COMMISSION
Horizon 2020 | GV-02-2016 | Technologies for low emission light duty powertrains
GA # 724145

Deliverable No.	PEMs4Nano D2.07	
Deliverable Title	Calibrated PEMS particle counting system and calibration procedure	
Deliverable Date	2018-10-30	
Deliverable Type	REPORT	
Dissemination level	Public (PU)	
Written By	Philipp Kreutziger (HORIBA Europe GmbH)	2018-10-24
Checked by	Philipp Kreutziger (HORIBA Europe GmbH) Florian Huewe (HORIBA Europe GmbH)	2018-10-25 2018-10-25
Approved by	Hans-Georg Horn (TSI) Antonio Pérez (IDIADA) Marcus Rieker (HORIBA) - Coordinator	2018-10-25 2018-10-25 2018-10-30
Status	Final	2018-10-30

Executive Summary

Objectives

Within PEMs4Nano project the particle emissions from vehicles should be evaluated under real driving conditions. As it is possible to measure these emissions on the chassis dyno with the LabSystem for sub-23 nm particles (calibrated in previous work during report D2.02 and D2.04), there is also the need to have an on-board system (OBS) for real driving emission (RDE) measurement. For these purposes a condensation particulate counter (CPC) has been calibrated by the project partner TSI in report D2.05. HORIBA Europe is designated to deliver at the end of this deliverable a fully functionable mobile exhaust measurement equipment for particle emissions from 10 nm onwards. The PEMs4Nano proposal is projecting Month 25 (October 2018) as a target for completion of the above described on-board system including all modifications. The necessary investigations and calibrations have been finalized and the instrument is ready for shipment to Bosch for single cylinder engine test bench measurements. After initial testing and correlation measurement it is later shipped then to the project partner IDIADA to fully characterize and validate the equipment during real world driving.

Methods

Creating the PEMs4Nano PEMS prototype for at least 10 nm, a modification of the CPC installed (D2.05) as well as the replacement of the original catalytic stripper (CS) with an optimized CS has been performed. The main purpose for developing a calibration setup for these small particles had been on maintaining the best consistency and interchangeability according to 23 nm PEMS devices.

The following procedures have been performed, explained and analyzed in detail.

- Flow calibration
- C_0-value / PCRF evaluation
- Volatile Particle Removal (VPR) efficiency
- System efficiency

In addition to the C_0-value (PCRF) calculation of the standard PEMS calibration (originally done at 200 nm monodisperse soot) the PMP compliant average using 100 nm, 50 nm and 30 nm including further values like 23 nm and 15 nm have been investigate.

Results

The overall targets according to the setup and delivering a PEMS device, which is capable of measuring down to 10 nm, has been achieved. However, further improvement at the on-board system as well as for the calibration setup is considered and will be discussed within this report.

Comparing the originally OBS-ONE PN C_0-value determination with the fully compliant PMP method for determining the particle count reduction factor (PCRF), the system stays within the allowable values. Going down to smaller particle sizes like 10 nm, 15 nm or 23 nm this method delivers a lot more particle losses in the VPR.

Considering any final definitions of extended C_0-factors (PCRF) also including smaller particle sizes, it should be suggested that C_0-factors need to be included for smaller particle sizes. Considering the results of D2.04 for the laboratory system the definition of C_0-value (PCRF) should be chosen wisely according to particle sizes as well as by considering statistics of real emitted size distributions of currently prevailing modern engine concepts.

Contents

Figures

Tables

1 Introduction

According to the schedule of the PEMs4Nano project the development of the measurement equipment is on its final stage. While emission measurements on Single-Cylinder and Multi-Cylinder test-benches have already been performed with the PEMs4Nano LabSystem, additional investigations must be done on the chassis dyno as well as on the real road to show reproducibility and its potential for future duties and responsibilities according to the measurement capabilities.

For that purpose, HORIBA Europe is designated to develop a PEMs4Nano PEMS as well as its calibration procedure, which will be presented in this D2.07 report.

There are several modifications according to the 23 nm PEMS done. Most important, which are directly relevant on the performance to measure particles below 23 nm are the following adaptations and modifications. The condensation particle counter (CPC) has been calibrated by the project partner TSI in D2.05 to achieve at least 50% counting efficiency for 10 nm particles. In addition to that, in collaboration with University of Cambridge supplies an improved catalytic stripper for minimized particle losses at low particle sizes, was developed, integrated and characterized.

The task within this project deliverable for HORIBA is to set-up a reliable and accurate calibration test bench to reproduceable calibrate the system according to its particle losses and system efficiency.

After this modification and calibration of the PEMs4Nano PEMS which is projecting month 25 (October 2018) as target for completion of the above described PEMS modifications, the instrument will be transferred to the project partner Bosch for initial measurement on the single cylinder engine dyno. After that, the device is handed over to IDIADA for cassis dyno emission tests and real driving emission measurements.

2 Solid particle counting method & challenges on 10 nm On-Board System measurement

A new test procedure called WLTC (Worldwide harmonized Light Duty Test Cycle) has been introduced since 1st of September 2017 for new types of engines and since 1st of September 2018 for all new vehicles. In addition to that all vehicles are monitored for RDE legislation which requires an on-board measurement equipment [2;3]. A particle number limit has been introduced for all gasoline light duty vehicles with direct injection system in September 2014 with a solid particle limit of 6x10^12 #/km and has been lowered to 6x10^11 #/cm³ in September 2017. For RDE legislation the limit of solid particles with a D_{50} of 23 nm has been set to 6x10^11 #/cm³ with a conformity factor of 1,5 which is referring to measurement uncertainty of the equipment, within the variety of RDE boundary conditions.

For measuring this number of emitted particles, the UNECE Particle Measurement Programme (PMP) previously developed a measurement procedure for the quantification of solid, non-volatile particles of about 23 nm and larger. This method is well described in the previous report D2.04 for a solid particle number counting system (PNCS) directly sampling from a CVS-tunnel.

2.1 Overview on solid exhaust sampling for PEMS

As requirements to the instrumentation for on road testing are different from laboratory instruments, no PN counter in the market can fulfill the setup laud out by the PMP so far. The concept of our PN-PEMS system stays close to the standard PMP laboratory systems with a preconditioning unit, consisting of an evaporation unit in between two dilution stages and a condensation particle counter (CPC), which is optimized by mobile applications.

The exhaust flow is variable by directly sampling from the tailpipe in comparison to a certification measurement with a CVS tunnel. Therefore, an exhaust flow meter (EFM) has to be applied.

Figure 2-1 illustrates a schematic structure of an on-board particle number counting system by sampling from an exhaust flow meter after the tailpipe of the vehicle.

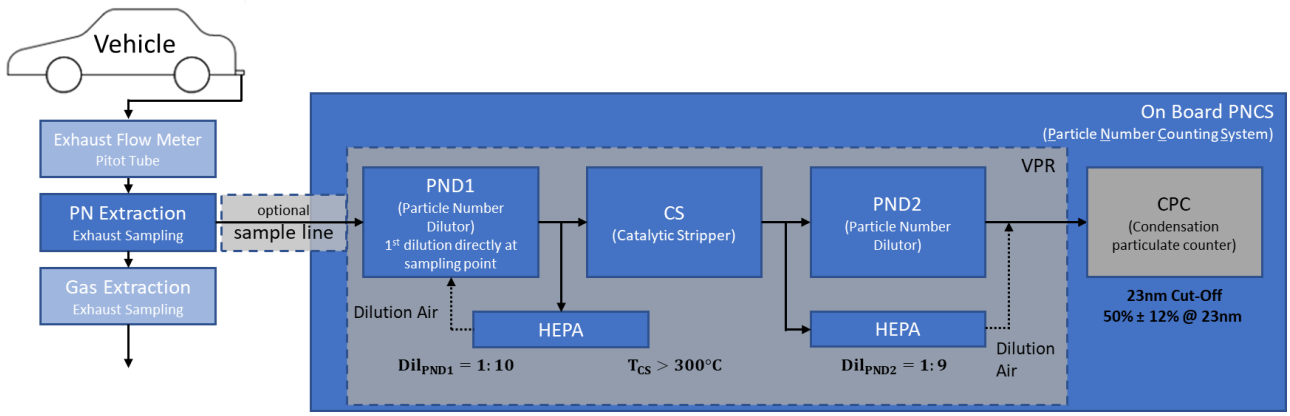

Figure 2-1 Schematic of a setup for particle number measurement for an on-board system.

The Volatile Particle Remover implemented in this setup is the pre-conditioning unit as described in the regulation 2017/1154 of 7th of June 2017 to the amending Regulation (EU) 2017/1151 of the European Parliament [3].

The flow delay times of the aerosol between the sampling point and the CPC is regulated. To prevent further particle formation or nucleation it is recommended to keep the residence time as low as possible, but at least < 3s. For the HORIBA OBS-ONE PN this residence time is much less due to direct dilution at the PN extraction point.

2.2 HORIBA OBS-ONE PN working principle

Figure 2-2 illustrates the flow schematic through the HORIBA OBS-ONE PN unit with the sample extraction point within the EFM (pitot tube). Referring to Figure 2-1 the length of the sampling line is reduced to a minimum because the first dilution stage (PND1) is directly located at the sample probe inlet.

The basic working principle of the PEMS components will be shortly introduced and explained from back-to-front looking at the aerosol stream, thus starting at the CPC as final particle detector.

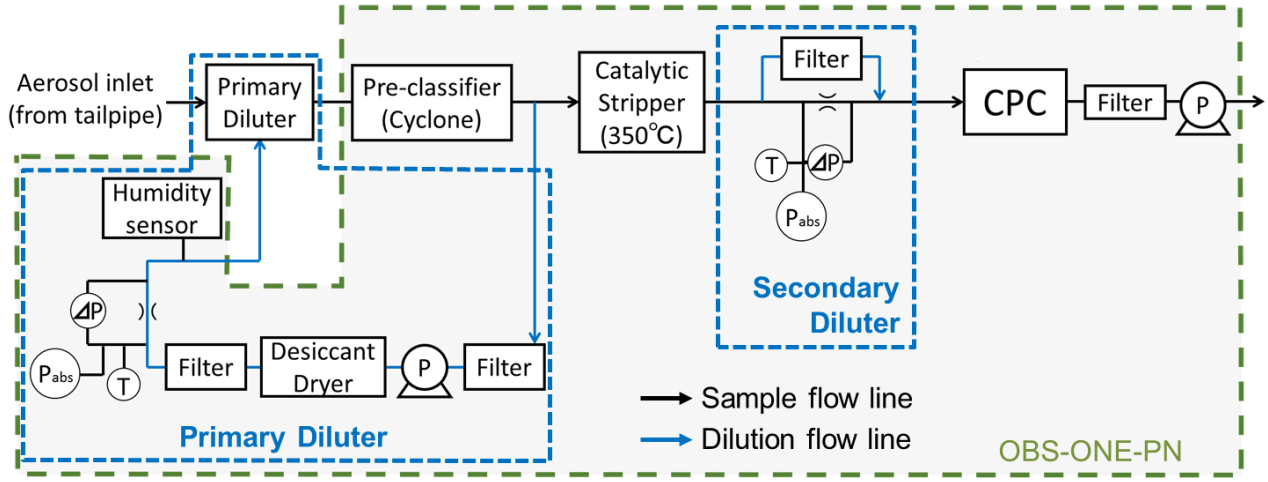

Figure 2-2 Flow Schematic of OBS-ONE PN [4]

CPC

HORIBA OBS-ONE PN system includes a TSI modified CPC which is optimized for the operation at on-board measurements. It works with an Isopropanol soaked wick eliminating the need of hazardous liquid reservoir during operation. It is designed as a bypass flow CPC to achieve up to 5x10^5 particles/cm³ which leads to a maximum total particle concentration of around 5x10^7 #/cm³, including the dilution stages.

The aerosol flow through the CPC is determined by an internal flow orifice, resulting in a flow of approximately 0,1 liters/minute (SLPM) at standard conditions of 293,15 K (20°C) and 101,3 kPa.

PND2 (Secondary Diluter)

The dilution ratio (defined as sample flow divided by the dilution flow) of the second Particle Number Diluter in the OBS-ONE PN is online-determined and is initially set to a constant value of 1:9. Here the dilution ratio cannot be directly controlled by a mass flow controller or a flow orifice. To maintain an accurate dilution factor, it is monitored during the measurement. This is mainly done by means of a critical pressure measurement across the flow orifice. The pressure drop of the HEPA-filter in the dilution air flow and the flow orifice in the sample flow are primarily responsible for the second dilution factor. As described the factor is permanently monitored and therefore this variable dilution factor is a part of the calculation for overall particle concentration.

Catalytic Stripper (CS)

The heated catalytic stripper in the OBS-ONE PN is connected to stainless steel tubes and is heated up to 350°C for a designed flow of 0.7 SLPM. The inner core of the catalytic stripper consists of a standard ceramic monolith material with an oxidation coating supplied on it.

PND1 (Primary Diluter)

The first Particle Number Diluter in the OBS-ONE PN with an online-determined dilution factor of around 1:10 is designed to supply dry and clean air directly at the front end of the sample probe at the exhaust flow meter. It is monitored in the same way as PND2 through a flow orifice and a pressure sensor. Within this cycle a pump is implemented which is responsible to maintain the flow at a constant value of around 6,3 standard liters per minute (SLPM).

Cyclone (Pre-classifier)

The shown HORIBA OBS-ONE PN is equipped with a cyclone within the PND1 to remove large particles in the 1st dilution air by inertial deposition. This prevents contamination of subsequent components by particles greater than 1 µm.

Exhaust flow meter (EFM)

An exhaust flow meter is connected to the tailpipe of the vehicle. It contains of 2 sampling points, one for particulate number emission measurement and one for the gaseous emission measurement. The locations of the probes for PN analyzer and Gas analyzer are defined. The probe of the PN analyzer is installed upstream of the Gas analyzer. In addition to that, upfront these two sampling locations there is a pitot based differential pressure measured to calculate the current exhaust mass flow, which is crucial in order to determine the total final emission of exhaust gas components of the vehicle.

2.3 Challenges on sub-23 nm measurements for PEMS

This section shortly summarizes the challenges for the modification of a HORIBA OBS-ONE PN system leading to the PEMs4Nano PEMS. This system consequently will be available for the upcoming emissions measurements at the project partners test benches.

In sub-section 2.7 of the previous report D2.04 the main challenges for the PEMs4Nano-LabSystem already have been addressed and are summarized as follows:

- CPC calibration from $\mathrm{D}_{50} = 23\ \mathrm{nm}$ to $\mathrm{D}_{50} = 10\ \mathrm{nm}$ to be able to measure from 10 nm onwards with the risk of measuring artifacts like volatiles coming from re-nucleation before or after the 2nd dilution stage
- Evaporation Tube (ET) has been changed to Catalytic Stripper (CS) to catalytically treat non-solid particles to minimize the risk of measuring artifacts due to re-nucleation
- CS must be optimized regarding particle penetration to avoid too many particle losses (diffusion; thermophoresis)

These modifications have been done as described for the PEMs4Nano-LabSystem. For the PEMs4Nano PEMS the challenges are similar, but the starting point is different. In the HORIBA OBS-ONE PN there is already a catalytic stripper implemented to avoid measuring artifacts even at 23 nm, due to re-nucleation of volatiles or semi-volatiles because of the design of the 2nd dilution stage and the different temperature/humidity condition where the OBS can be employed. Therefore, it is necessary to increase the particle penetration efficiency by optimizing the catalytic stripper, which has been done and is presented in the results section of this report.

In addition to the size and mass limitation for an on-board system, there is only limited power available, therefore the increase of the power consumption by increasing CPC saturator temperature is a challenge. A higher saturator temperature will also increase the consumption of the working fluid. Both challenges have been investigated and presented in the previous report D2.05 and the desired targets are met.

3 Experimental Setup

In this section there is an overview about the desired layouts and tests, which are necessary to fully characterize the PEMs4Nano PEMS. For initial calibration, there are several steps that need to be performed to make sure that the system is working correctly. According to existing 23 nm legislation, it is necessary to perform the calibration procedure for maintenance on an annual basis [3].

In report D2.05 in section 2.5 the calibration of the CPC inside the OBS-ONE PN has been described. Therefore, this report is considering that setup as a starting point. To initially calibrate the CPC cut-off curve correctly, the CPC-flow needs to be adjusted. Even though the starting point has been well defined, the flow needs to be either corrected or adjusted due to changes in the equipment and is described in the sub-section 3.3.1 in this report.

The results of the HORIBA experimental setup can be found in this report in section 4.

3.1 Overview Calibration Setup

The calibration of PMP compliant PNCS like the HORIBA MEXA-2X00 SPCS is well described in the former report D2.04 in section 2.4. and equations are transferred into this report including the calculations which are described in the following sections including their sub-sections (of report D2.04).

The schematic of the calibration setup used for the PEMs4Nano PEMS calibration is shown in figure 3-1 and the reference devices are calibrated according to ISO27891 [5].

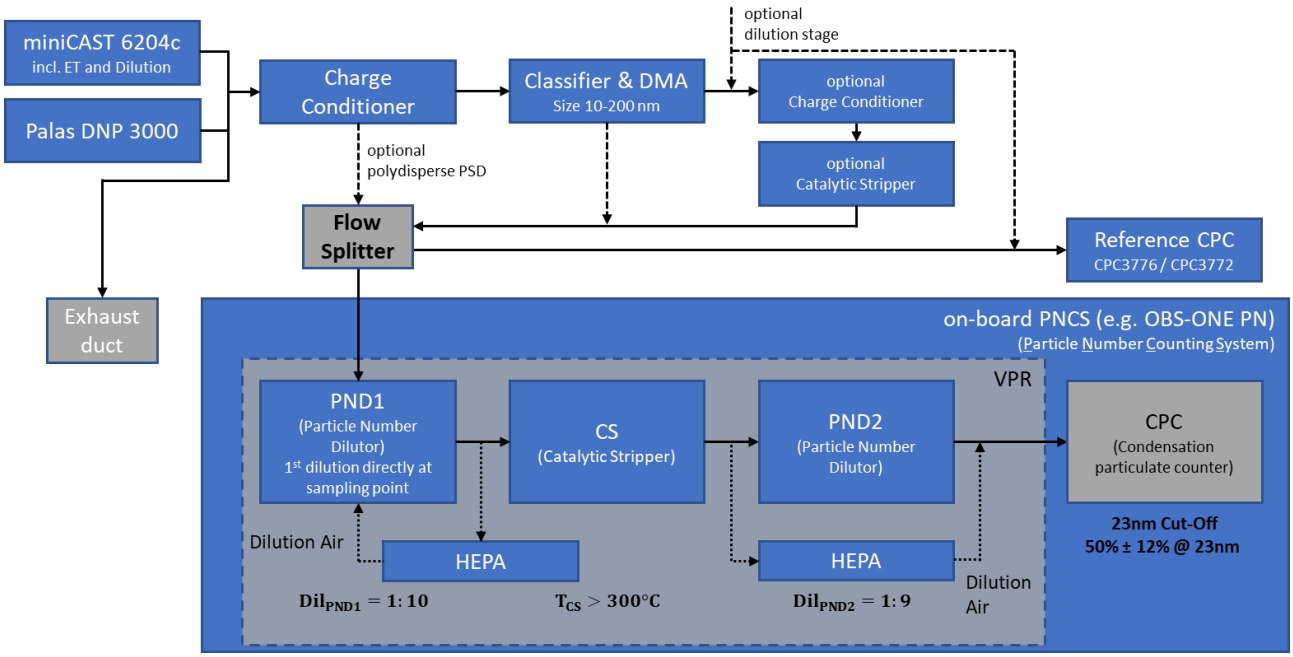

Figure 3-1 Schematic of the calibration setup at HORIBA for an on-board measurement PN system

The main intention of the calibration setup is, that a monodisperse or polydisperse size distribution can be generated by a particle generator (including classifier), and that the generated aerosol is measured by the equipment in comparison to a reference device. It is mandatory to have a reliable particle size distribution, e. g. from cast, to have a high accuracy and reproducibility for the calibration.

As described in report D2.05 and as figure 3-1 shows, there is the necessity to implement radiation sources to achieve a good conditioning of particles over the whole size range of interest (here 10 nm to 200 nm). There are multiple stages where optional radiation sources can be implemented. In addition to charge conditioning, it is mandatory to reduce the number of volatiles and semi-volatiles generated by the miniCAST particle generator.

Therefore, a catalytic stripper has been implemented additionally. Further optimizations to minimize the number of volatiles and semi-volatiles in the aerosol will be discussed in the results and conclusion section.

Below, the following devices which were used for the calibration are listed. Some of them and their main functions are already described in the sub-section 3.2.1 of report D2.04. The soot/aerosol-generators will be described in detail in section 3.2.

- **Flow-Meters**
  - TSI4140
  - Film-Flow Meter HORIBA STEC
- **Soot Generator**
  - Palas DNP3000
  - MiniCAST 6204c
- **Classifier & DMA**
  - Electrostatic particle size classifier: TSI 3080
  - DMA: TSI 3081 "Long-DMA"
- **Reference-CPC (UFCPC, REF)**
  - CPC-100
  - CPC 3772
  - CPC 3776

To achieve accurate and reliable results, some reference measurements have been performed with a CPC-100 (full flow at 1 SLPM with $D_{50} = 23\ \mathrm{nm}$) like they are implemented in HORIBA MEXA SPCS 2X00 series, a TSI CPC 3772 (full flow at 1 SLPM with $D_{50} = 10\ \mathrm{nm}$) and a TSI CPC 3776 (ultrafine CPC with partial flow $D_{50} = 2{,}5\ \mathrm{nm}$, where the flow can be adjusted to 0,3 SLPM or 1,5 SLPM). In section 4 the results with the TSI CPC 3776, which has been selected for reference due to availability reasons, are presented and discussed. The flow of this measurement device has kept constant and was set to 1,5 SLPM.

3.2 Methodologies (particle generation)

While performing the OBS-ONE PN calibration, two different particle (soot) generation methods have been used.

1. Diffusion flame soot generator (miniCAST 6204c) [5]
2. Graphite generator, producing carbon aerosols by spark discharge (PALAS DNP3000) [6]

A miniCAST 6204c has been used to characterize the measurement equipment and system efficiency curve. The principle of the generation of cast soot is illustrated in figure 3-2 and the settings are displayed in the sub-section 3.2.1.

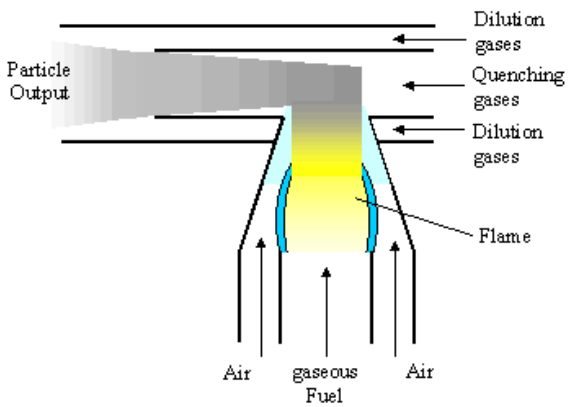

Figure 3-2 Principle of Cast generation from a miniCAST 6204c [6]

The supply of gaseous fuel (here: propane) can be mixed with additional nitrogen (N2) for dilution purpose before it is even supplied to the burner. Oxidation air can be varied and is supplied from the outside of the main flame, which is necessary for ignition. Quench gas can be varied, which is mainly there to immediately reduce the time the fuel gas is burning. To avoid re-nucleation and to reduce volatile formation, additional dilution gas can be supplied in the direction to the particle output. With these different parameters it is possible to achieve high concentrations of soot-like monodisperse aerosol.

For the calculation of the C_0-value (PCRF), the PALAS DNP3000 has been used due to the different method of generating particles. The main benefit of this soot generator is that the soot is generated by spark discharge and almost no volatiles or semi-volatiles are created. In addition, higher concentrations were achieved between 30 nm and 100 nm.

3.2.1 miniCAST settings

In this subsection there are some examples shown for particle size distributions which results from different miniCAST settings. For cast generators, the settings cannot be generalized due to manufacturability of the ignition cell. Therefore, each cast aerosol generator needs to be evaluated on its own.

Particle size distributions as shown in figure 3-3 and table 3-1, are applicable for the calibration for the particle number counting system.

Table 3-1 miniCAST-settings for soot generation

Setup	Fuel Gas C3H8 in ml/min	Mixing Gas N2 in ml/min	Oxidation Air in l/min	Dilution Gas In l/min	Quench Gas In l/min
10 nm	26	60	0,37	3	2
15 nm	24	0,6	0,35	3	2
23 nm to 100 nm	24	40	0,61	5	2
200 nm	23	0	0,57	3	2

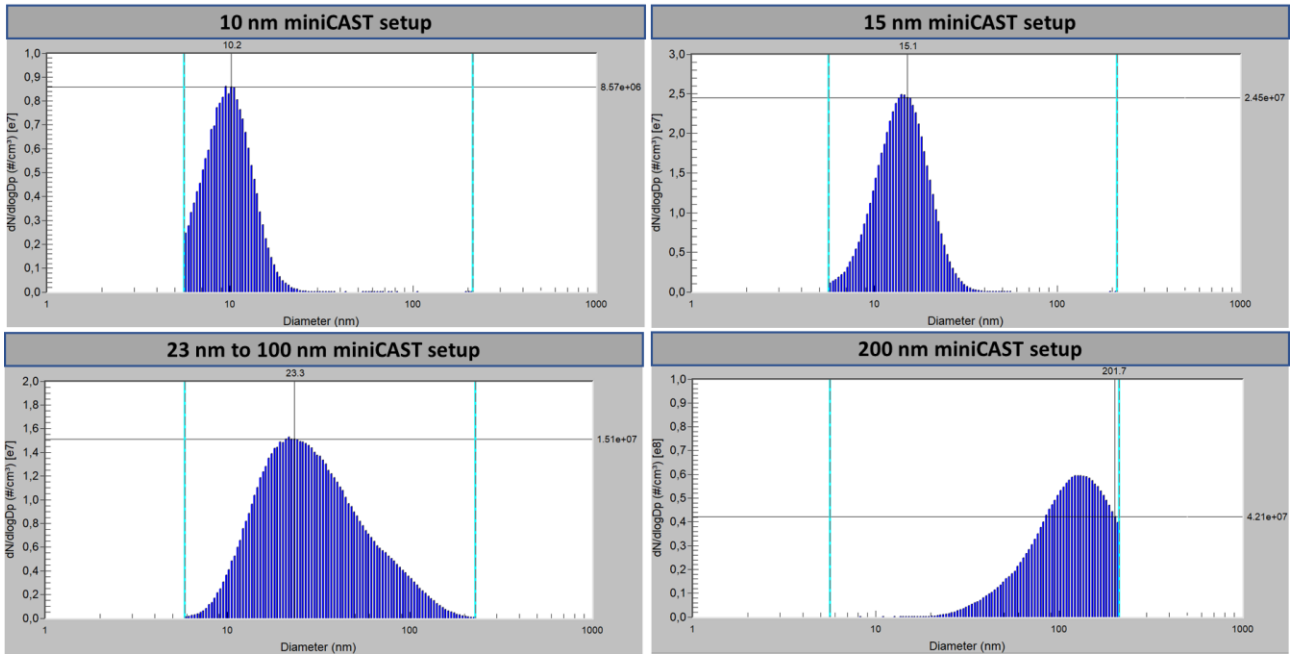

Figure 3-3 miniCAST settings for different particle size

Since the particles generated from 10 nm to 200 nm have to be solid, the aerosol supplied by the miniCAST is thermally treated with an evaporation tube (ET) which is heated up to 380°C. To avoid re-condensation of volatiles and semi-volatiles the aerosol is then diluted, which is already included in the miniCAST-setup.

3.3 HORIBA Calibration / Validation

The general layout for calibrating the system have been illustrated in figure 3-1. The reference CPC and the system have been measured with a flow-splitter at the same time. As described a CPC 3776 has been chosen as reference instrument.

An adjustment due to the existence of different detection efficiency curves by the CPC in the OBS $[E_{CPC\_OBS)}(D_p)]$ in comparison to the CPC 3776 $[E_{CPC3776}(D_p)]$ is necessary. In figure 3-4 the detection efficiencies of the OBS-CPC and the TSI CPC 3776 are displayed.

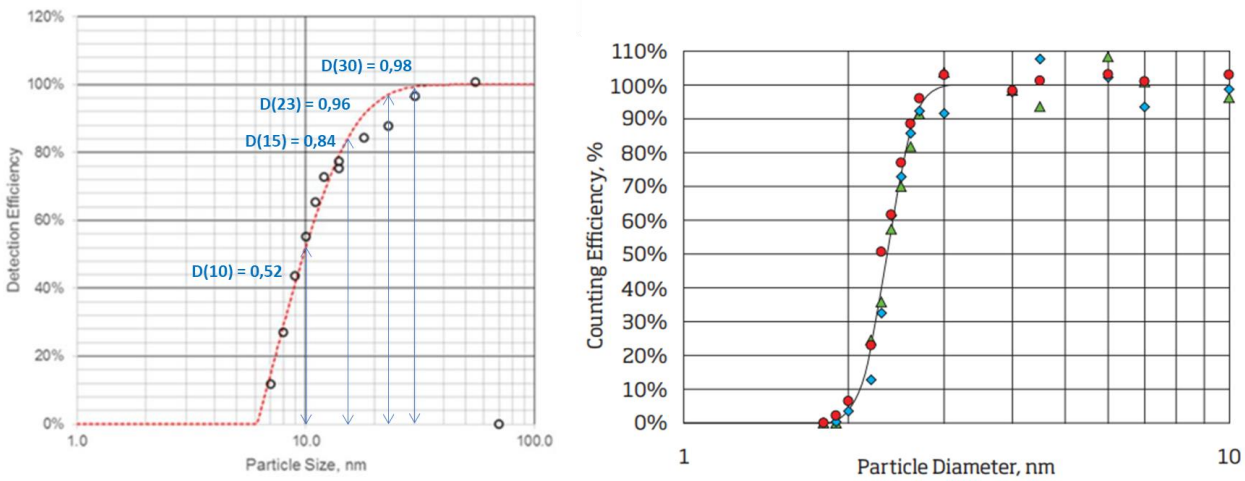

Figure 3-4 Detection efficiency curve of OBS-CPC (left) from report D2.05 and from CPC 3776 [7] (right)

For comparison of the CPC concentrations it is mandatory to normalize the concentration as if it was measured with the reference CPC. The calculation therefore is displayed in equation 3-1.

$$C_{CPC\_OBS\_normalized} = \frac{C_{CPC\_OBS\_measured}}{E_{CPC_{OBS}}(D_p)} \cdot E_{CPC3776}(D_p) \qquad \text{Eq. 3-1}$$

$$C_{CPC\_OBS\_normalized} = \frac{C_{CPC\_OBS\_measured}}{X} \qquad \text{Eq. 3-2}$$

The value for each particle diameter adjustment is presented in table 3-2.

Table 3-2 Caption text for tables above the table.

D_p in nm	10	15	23	30
X = $\mathbf{E_{CPC\_OBS)}(D_p)}$ / $\mathbf{E_{CPC3776}(D_p)}$	0,52	0,84	0,96	0,96

The equations and calculations above are mandatory for the following sub-sections like C_0-value (PCRF) and system efficiency measurement corrections. The following sub-sections are describing the necessary steps to calibrate the PEMs4Nano PEMs.

3.3.1 Flow

The first step is to adjust the flows inside the device. Therefore, there is a need to calibrate the flows to a reference flow measuring device. In the on-board system, there are 2 pumps implemented. The electric tension is proportional to a differential pressure measured over a flow orifice. It is necessary to adjust this to standard conditions because the flow is dependent on barometric pressure and temperature. If this has been considered, a flow-correction factor (FCF) can be applied to adjust the flows. In the following figure, there is a flow schematic for the PEMS in figure 3-5 illustrated. The shortcuts F1 to F5 explain the flows which are mandatory to be adjusted correctly with the adequate reference flow meters.

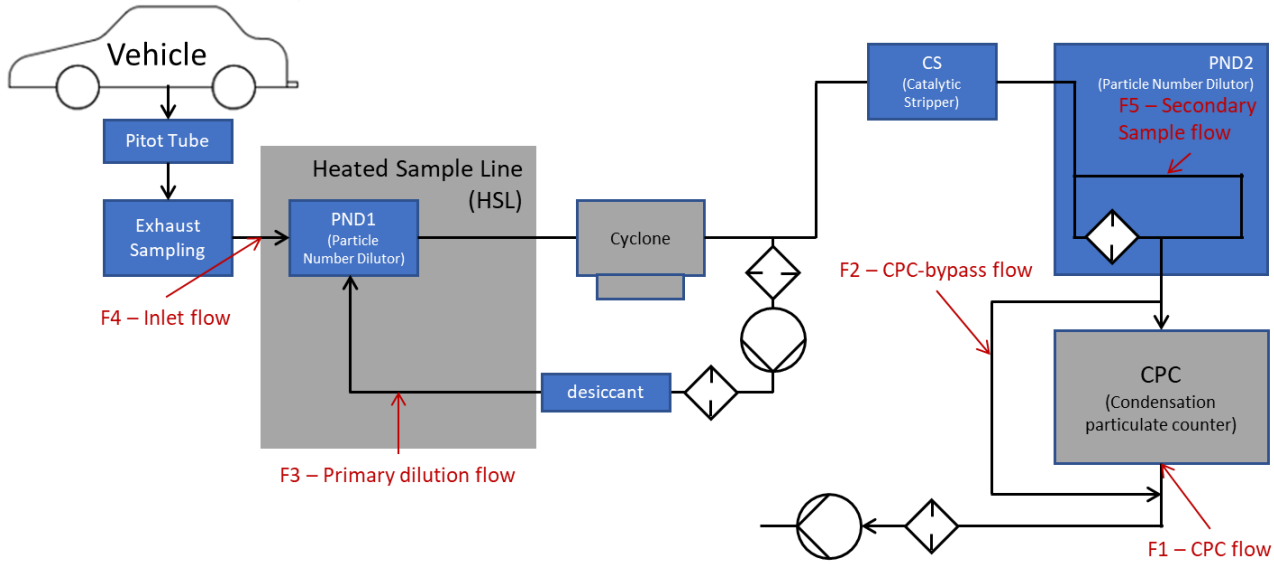

Figure 3-5 Connection points for flow meters during flow calibration

Table 3-3 lists the flow-meters, its descriptions and the calculations including the target flows.

Table 3-3 Caption text for tables above the table.

Flow-Meter	Description	Should SLPM	Calculation	Allowable Tolerance
F1	CPC Reference Flow	0,1	F1 = F6	-
F2	Bypass Reference Flow	0,6	F2 = F7	-
F3	Dilution Reference Flow	6,3	F3 = F8	-
F4	Inlet Reference Flow	0,7	F4 = F1+F2	-
F5	Sample 2 Reference Flow	0,07	F5 = F9	-
F6	CPC Flow	0,1	-	± 5,0%
F7	Bypass Flow	0,6	-	± 16,0 %
F8	Primary Dilution Flow	6,3	-	± 3,0 %
F9	Secondary Sample Flow	0,07	-	± 20 %

For the calibration procedure, 5 different reference flow meters must be adapted. For each internal flow measurement, the correct Flow Correction Factor must be set. During operation the flows are monitored and could cause an alarm signal if the device is not working proper anymore.

The flow through the secondary diluter (filter) cannot be varied directly because of the setting of a filter and a flow orifice but it is monitored and therefore the 2nd dilution factor is calculated within the software constantly.

If the flow is set correctly for the CPC, the initial CPC calibration can be done. As this is not part of the report, the calibration procedure continues with the evaluation of the Particle count reduction factor (PCRF) and the C_0-factor evaluation.

3.3.2 C0-factor & PCRF

The C_0-factor describes a size independent loss correction factor for particles within the on-board measurement device. This standard value is determined in the OBS-ONE PN by the 200 nm point of the system efficiency curve.

The calibration setup which is used has been illustrated in section 3.3 and will not be further described here. For the evaluation of the C_0-factor at least three different concentrations (C_i; i=1;2;3) should be considered to calculate as the following:

$$C_0(D_p; C_i) = \frac{C_{CPC\ reference}}{C_{OBS}} \qquad \text{Eq. 3-3}$$

Whereas the C_0-factor for different concentrations needs to be adjusted with a linear regression including the point of origin.

As described above, it is possible to measure the concentration of the CPC reference (TSI CPC3776) and the OBS-ONE PN in parallel. Therefore, it is possible to use equation [3-3] from above for different particle diameters, like described in the PMP regulation for PCRF calibration of a solid particle counting measurement system.

The equation 3-7 from report D2.04 only needs to be adjusted the following for comparison (here: 3-4). In addition to the currently calculated PCRF for 30 nm; 50 nm and 100 nm, it is evaluated if 15 nm; 23 nm also need to be integrated into the definition of the PCRF.

$$PCRF = PCRF_{30-100} = \frac{PCRF(30nm) + PCRF(50nm) + PCRF(100nm)}{3} \qquad \text{Eq. 3-4}$$

$$C_0 = C_{0_{30-100}} = \frac{C_0(30nm) + C_0(50nm) + C_0(100nm)}{3} \qquad \text{Eq. 3-5}$$

$$C_0 = C_{0_{23-100}} = \frac{C_0(23nm) + C_0(30nm) + C_0(50nm) + C_0(100nm)}{4} \qquad \text{Eq. 3-6}$$

$$C_0 = C_{0_{15-100}} = \frac{C_0(15nm) + C_0(23nm) + C_0(30nm) + C_0(50nm) + C_0(100nm)}{5} \qquad \text{Eq. 3-7}$$

$$C_0 = C_{0_{15-200}} = \frac{C_0(15nm) + C_0(23nm) + C_0(30nm) + C_0(50nm) + C_0(100nm) + C_0(200nm)}{6} \qquad \text{Eq. 3-8}$$

Once the C_0-value (PCRF) is set and implemented, the particle losses within the system should be compensate into the system. In the next sub-section, the system efficiency of the equipment is evaluated.

3.3.3 System Efficiency

For mobile application there are some system efficiency requirements which need to be achieved as result of calibration [3]. In Table 3-4 there is the efficiency illustrated according to legislation targets for a 23 nm based system.

Table 3-4 PN analyzer (including the sampling line) system efficiency requirements [3].

D_p [nm]	Sub-23	23	30	50	70	100	200
$E(d_p)$ PN analyser	To be determined	0,2 – 0,6	0,3 – 1,2	0,6 – 1,3	0,7 – 1,3	0,7 – 1,3	0,5 – 2,0

In legislation, the efficiency $E(D_p)$ is defined as the ratio in the readings of the PN analyzer system to a reference Condensation Particle Counter (CPC)'s (with $d_{50\%}$ = 10 nm or lower). Therefore, a TSI CPC 3772 with a cut-off at

10 nm can be used. For efficiency measurement and calibration of a CPC below 23nm the TSI CPC 3772 would not meet the requirements anymore. Therefore, a TSI CPC 3776 with a $d_{50\%}$ = 2,5 nm will be used.

In the case of a 23 nm particle system for on-board measurement, there are values defined for the detection efficiency of monodisperse soot like the values above.

Although these values are very broad, they are necessary for the sustain different types of on-board measurement equipment due to different measurement principles.

For a CPC based measurement technique, the targets for the measurements have been internally tightened by HORIBA. For the standard OBS-ONE PN (23 nm), used as starting point in this project, the system efficiency is defined by the following (Table 3-5).

Table 3-5 PN analyzer (including the sampling line) system efficiency – HORIBA requirements for 23 nm.

D_p [nm]	Sub-23 (15)	23	30	41	50	70	100	200
$E(d_p)$ PN in %	< 10	20-60	30-110	60-110	70-110	90-110	90-110	90-110

To maintain these ambitious targets for a 10 nm CPC calibration, the efficiency targets for this initial calibration have been set as shown in Table 3-6.

Table 3-6 PN analyzer (including the sampling line) system efficiency – Proposed HORIBA requirements for 10 nm.

d_p [nm]	Sub-10	10	15	23	30	41	50	70	100	200
$E(d_p)$ PN in %	To be determined	20-60	30-110	30-110	60-110	70-110	90-110	90-110	90-110	90-110

3.3.4 VPR

The volatile particle removal efficiency (VPR) of the PEMs4Nano PEMS is evaluated by the following set-up shown in figure 3-6. The target for the removal efficiency of the system is set to be higher than 99 % for ≥ 30 nm tetracontane particles at a 2-minute period.

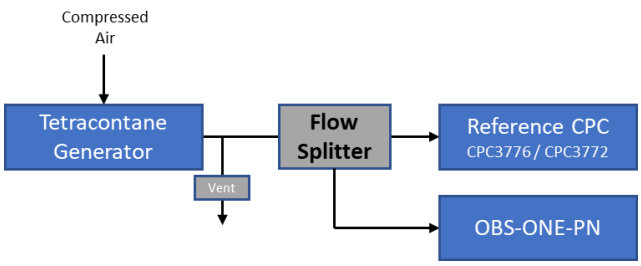

Figure 3-6 Experimental setup for evaluation of the volatile particle removal efficiency of OBS-ONE PN [4]

4 PEMs4Nano – On-Board System – Calibration Results

In this section the results of the calibration of the HORIBA OBS-ONE PN unit are shown according to the described calibration methodology (see section 3.3).

The starting point for the calibration procedure performed at HORIBA Europe GmbH is a flow-calibrated OBS-ONE PN device with a modified CPC calibration performed by TSI (report D2.05). Thus, the flow calibration results are displayed from the initial calibration. These values have been checked according to every modification as the following test have been performed like the following:

1. Initial OBS-ONE PN calibration with original Catalytic Stripper implemented and modified CPC calibrated to $D_{50} = 10\ \mathrm{nm}$.
   - Calibration of flows performed at TSI and checked at HORIBA Europe GmbH
   - CPC calibration performed at TSI – results displayed in Report D2.05
   - Calibration particle sizes: 200 nm, 3 concentrations
   - Calibration (System Efficiency) particle sizes: 15 nm – 200 nm
2. PEMs4Nano PEMS calibration after the modification at HORIBA
   - Modified system equipped with improved Catalytic Stripper
   - Flow calibration checked
   - Calibration particle sizes: 200 nm, 5 concentrations
   - Calibration (System Efficiency) particle sizes: 10 – 200 nm
   - VPR efficiency

Unfortunately, the adaptations to the calibration setup have not been sufficient at 7 nm. Therefore, the results for 7 nm could not be reproduced and are not presented within this report. In section 5 there will be a set of further optimizations discussed.

4.1 Flow calibration

The flows of the HORIBA OBS-ONE PN have been calibrated like described in chapter 3.3.1 and the results are displayed in Table 4-1. The flow is well adjusted by meeting the tolerance criteria and therefore the next measurements can be performed.

The SLPM values for the OBS-ONE PN are referring to 101,3 kPa and 20°C (293,15 K).

Table 4-1 Flow Calibration Results

Item	Reference SLPM	Std. Deviation Ref. flow	Value SLPM	Deviation	Criteria	Pass
CPC Sample Flow Rate	0,101513	0,003597	0,1	1,51 %	± 5,0%	yes
CPC Bypass Flow Rate	0,604446	0,002123	0,6	0,74 %	± 16,0 %	yes
1st Dilution Flow Rate	6,250282	0,006843	6,3	-0,79 %	± 3,0 %	yes
2nd Sample Flow Rate	0,073161	0,000089	0,07	4,52 %	± 20 %	yes

4.2 C0-factor & PCRF

As the flows are adjusted and the standalone CPC correction factors have been determined in report D2.05 the only value which is missing to fully calibrate the HORIBA OBS-ONE PN system is the C_0-value.

Particle concentrations between $10^4\ \mathrm{P/cm^3}$ and $5 \cdot 10^4\ \mathrm{P/cm^3}$ for 200 nm have been used for C_0-value evaluation. This has been performed with the original implemented catalytic stripper and the by the project partner University of Cambridge optimized catalytic stripper. Both C_0-values are displayed in figure 4-1 and it can

be assumed that the solid particle penetration efficiency of the optimized catalytic stripper is improved by more than 5 % at 200 nm.

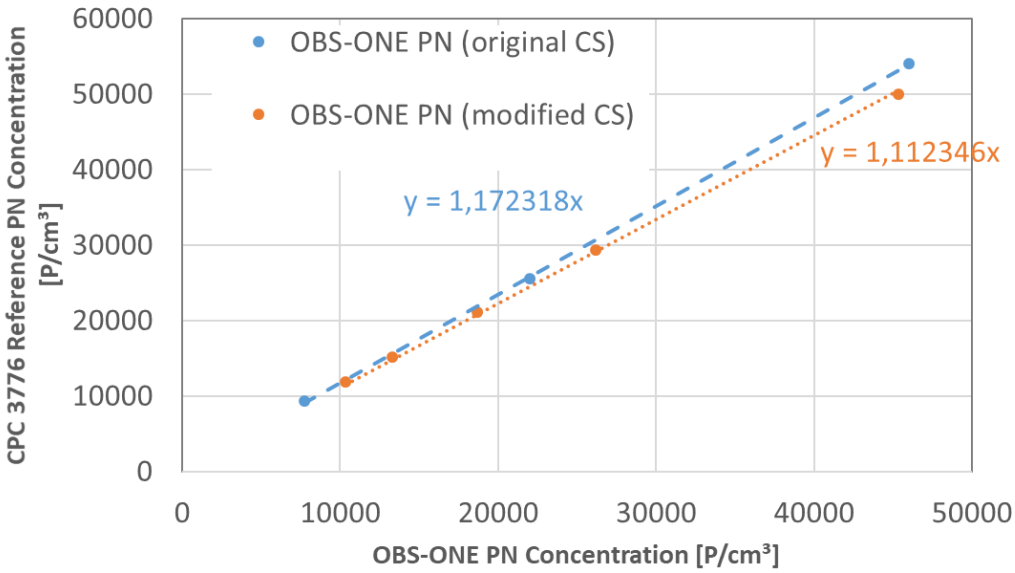

Figure 4-1: PEMs4Nano PEMS – Standardized C_0-factor Calibration for OBS-ONE PN

This effect can be explained by the results of figure 4-2, where the solid particle penetration curve shows an improvement of around 5-10 percent at 40 nm (comparison of 1 SLPM at 350°C). Heading for higher particle sizes, the penetration efficiency stays at the same level and therefore it is assumed that the same effect is observable at 200 nm.

In addition, there has been set an initial target for the particle penetration efficiency of the catalytic stripper which should have at least 50 % at 10nm. The initial setup already achieved 50% but it is optimized to 60% at 8 nm.

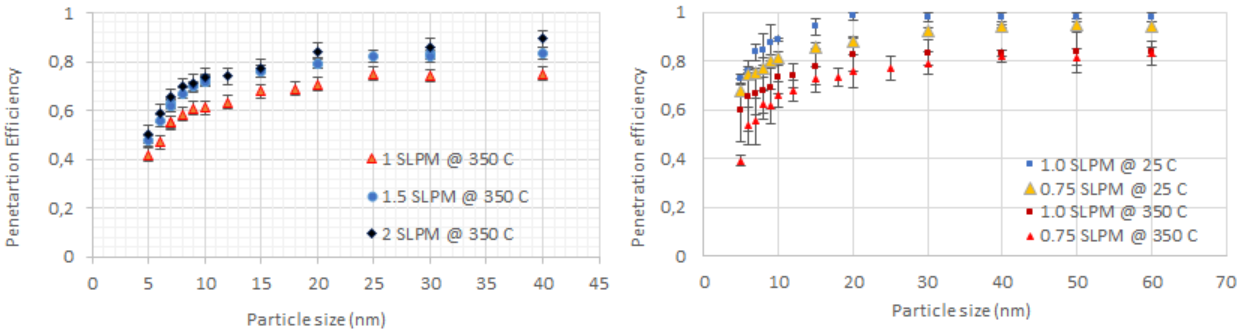

Figure 4-2: Solid particle penetration efficiency through catalytic stripper (left, original CS; right, optimized CS)

The calibration of the C_0-factor has been done. There are no compliance criteria because the RDE measurement system is not regulated. To compare with the standard PMP calibration method C_0-values have been measured for 100 nm; 50 nm; 30 nm; 23 nm and 15 nm.

These tests have been performed with a PALAS DNP3000 spark-discharge particle generator. The results are shown in figure 4-3 and it can be observed that the targets (like described in report D2.04) can be met. For 10 nm it has been difficult to achieve high concentrations with the spark discharge method, therefore only results from 15 nm onwards are interpreted.

The result of the test is displayed in figure 4-3 and it shows that the OBS-ONE PN C_0-value determination would be fully compliant if PMP method for determining PCRF would be added to RDE legislation. However, by going down to 10 nm, 15 nm and 23 nm the PMP PCRF calibration method should be optimized due to the increase of

the C_0-factor, for example to above 140 % at 23 nm. For comparison reasons, the HORIBA set targets for 23 nm (95% to 140%) and 15 nm (95%-160%) have been taken from report D2.04.

To improve the particle generator a miniCAST should be used as a soot generator but it is necessary to thermally treat the aerosol efficiently to avoid semi-volatiles and volatiles. Therefore, an exchange of the evaporation tube is considered within the miniCAST. To generate enough particles, any additional dilution should be avoided, and the lengths of the pipes should be minimized to avoid diffusion losses.

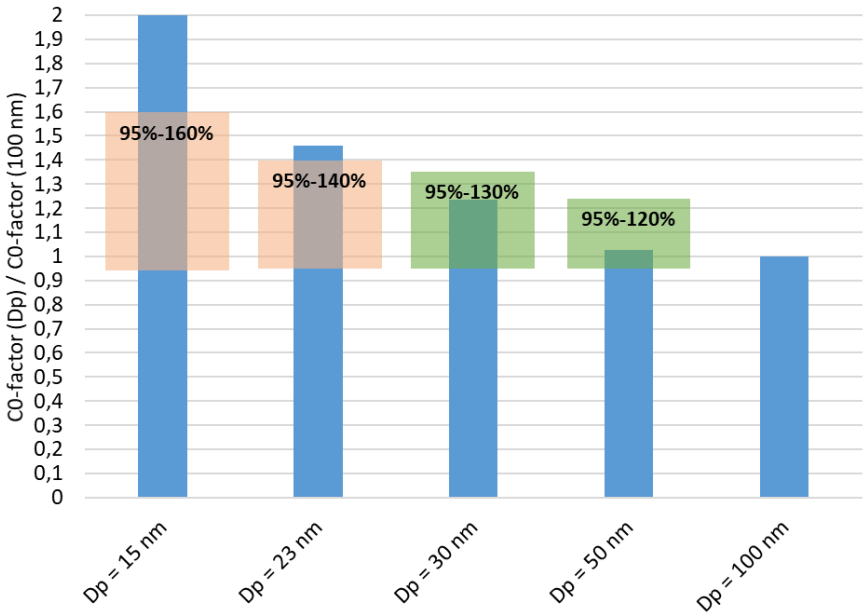

Figure 4-3: PEMs4Nano PEMS - C_0 calibration - C_0-100 nm normalized values over particle sizes (D_P)

If the C_0-values would be normalized to 200 nm, the following results displayed in figure 4-4 can be achieved. The tolerance for the C_0-value at 100 nm is set from 95 % to 110 % due to measurement uncertainty.

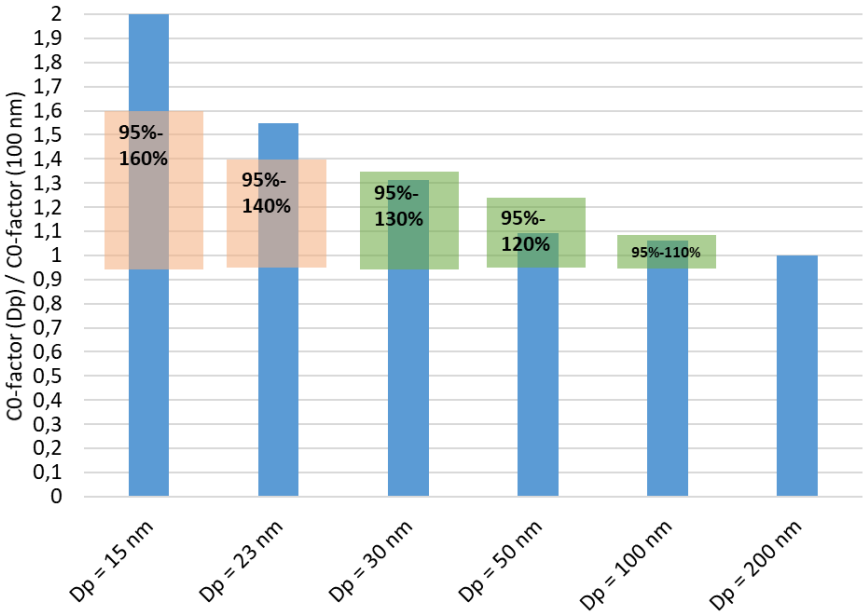

Figure 4-4: PEMs4Nano PEMS - C_0 calibration - C_0-200 nm normalized values over particle sizes (D_P)

Analyzing the C_0-normalized values, the limit for standard PMP legislation for 30 nm and 50 nm can be achieved. Going down to 23 nm the initial set target (referring to D2.04) of 140 % would again not be sufficient to achieve as well as the target for 15 nm for this system (C_0) evaluation.

4.3 System efficiency

After the C_0-value has been determined for the optimized PEMS ($C_0 = 1{,}112346$) it is implemented into the software of the system and in the following step, the system efficiency curve can be measured. For comparison, the system efficiency curves, of the two compared catalytic strippers are displayed in figure 4-5.

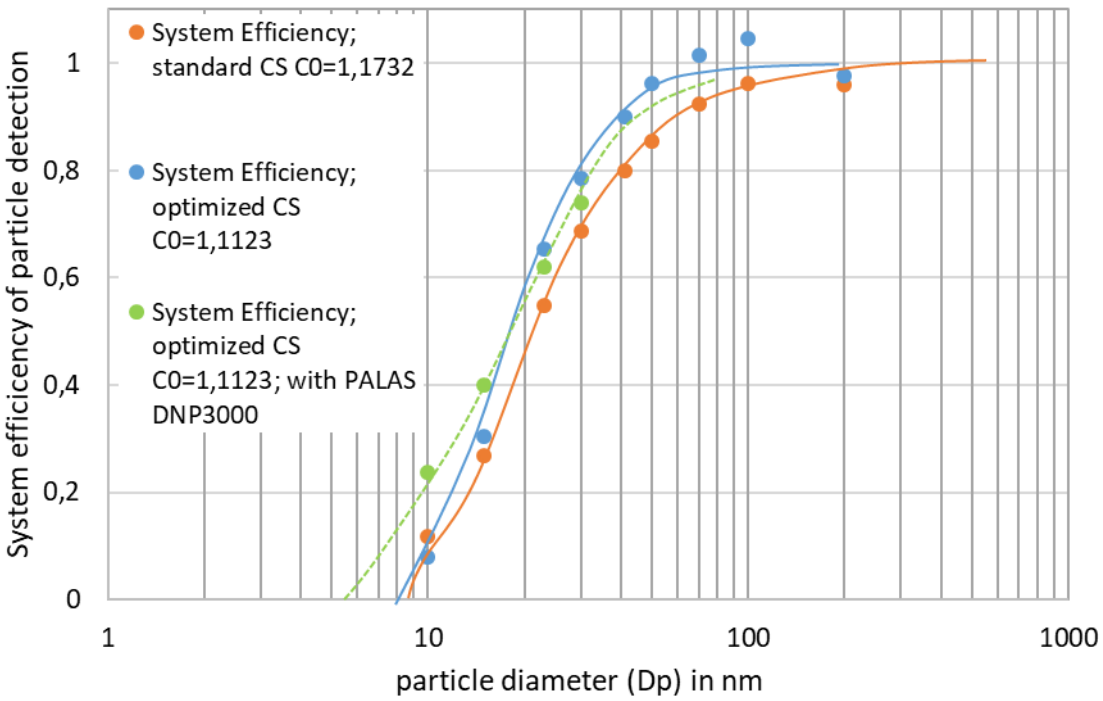

Figure 4-5: PEMs4Nano PEMS – System Efficiency with original and optimized CS

As expected the system efficiency (detection efficiency of particles by the whole system) is increasing for smaller particles (in example below 70 nm) by changing the original CS to the 10 nm optimized CS. The effect can be explained by the increase in particle penetration efficiency to 60% at 8 nm. The targets for a system efficiency, which were displayed at table 3-4, are achieved from 15 nm to 200 nm. Meeting the initial set targets from 23 nm to 200 nm very well does show, that the calibration method is sufficient. For 15 nm however, the particle concentration is getting very low and therefore the efficiency with the target set at 30 % and a result of 30 % efficiency is at the edge of the boundary conditions. For 10 nm the concentration of the particles from the particle generator is too low (below 1000 P/cm³), that the results are difficult to interpret, but they are included for completeness.

In comparison to a different soot generation methodology a PALAS DNP3000 was used to generate particles at 10 nm; 15 nm; 23 nm and 30 nm and the results are displayed in the system efficiency curve (green) in figure 4-5.

It is observed that the system efficiency increases for the low particle sizes performed with the Palas DNP3000 in comparison to the miniCAST. The in Table 3-4 set target of at least 20 % detection efficiency at 10 nm can be achieved, at least with the change of the soot generation method from diffusion flame soot to spark discharged graphite particles.

The system efficiency with the miniCAST at 10 nm of slightly above 10 % could be explained by the following reasons:

- Particle loss increase from going down from 200 nm (100 nm) to 10 nm (C_0-value/PCRF evaluation)

The definition of the C_0-value should be reconsidered by going down to 10 nm particle measurement for and on-board system. Currently it is not regulated, how to perform the test to determine the particle losses for RDE measurement. It is well known that particle penetration losses are increasing by going down to lower particle diameters due to diffusion and thermal losses.

- Measurement of volatile & semi-volatile particles

It is mandatory to achieve a high standard by thermally treating and conditioning of the calibration aerosol that the presence of volatiles and semi-volatile particles becomes almost irrelevant. Therefore, a CS should be implemented instead of an ET at the outlet of the miniCAST soot generator. In addition, a second charge conditioner should be implemented after the DMA.

- Too low concentration of particles at CPC / PND1 inlet

At 10 nm the diffusion losses increase significantly, therefore it is necessary to reduce the size and length of the tubes. A dilution is necessary to avoid re-nucleation and re-condensation of non-solid particles, but this should be reduced to a minimum.

In addition, it is necessary to keep the flows high and split the flows directly before entering the PND1 or the reference CPC.

- CPC cut-off calibration adjustment if possible to slightly lower than 10 nm

It has been evaluated, that the particle losses increase significantly within the system at 10 nm, therefore the CPC D_{50} calibration should be, if possible, below 10 nm. At the current stage the equipment is only available to detect 50 % at 10 nm at its best. Increasing this rate would give more room for adjusting the C_0-value (PCRF) correctly.

4.4 VPR

The results of the volatile particle removal efficiency of the PEMs4Nano PEMS are displayed in Table 4-2 and according to the criteria the system has passed the test by removing > 99 % of volatiles in the system.

Table 4-2 VPR removal efficiency of PEMs4Nano PEMS

Reference Concentration [cm³]	OBS-ONE PN Concentration [cm³]	Removal Efficiency [%]	Allowable Range [%]	Pass/ Fail
1,79E04	0,00E00	100%	> 99	yes

In future application the Tetracontane generator can be exchanged to Emery Oil, where the target is set to > 99 % removal efficiency for a polydisperse particle size distribution (PSD) of > 50 nm particles.

4.5 Summary

A calibration procedure has been described for an on-board system for particulate number measurement. The calibration includes the following topics which need to be fulfilled correctly:

- Flow calibration
- C_0 & PCRF evaluation
- System Efficiency
- Volatile Particle Removal

The CPC calibration and their connected checks have been already performed during D2.05. It is possible to adjust an on-board measurement device to at least 10 nm. However, to achieve the D_{50} value for the complete system efficiency, the following challenges need to be tackled:

- Particle loss increase when going down from 200 nm (100 nm) to 10 nm (C_0-value/PCRF evaluation)
- Separation of volatile & semi-volatile particles
- Higher concentration of particles at CPC / PND1 inlet

However, a lot of lessons have been learned, how to handle < 23 nm system for future calibrations. This means, a new calibration setup is currently built up with the implementation of all these above written modifications.

The comparison between the modified and optimized CS to the originally implemented CS fits very well to the expectations of a higher particle penetration rate and as such, lays the ground for the successful realization of a sub-23 nm PN-PEMS. To achieve a D_{50} system efficiency at 10 nm, a separate calibration of the CPC detector and the VPR is no longer feasible, but the PEMS-PN system detection efficiency needs to be calibrated as a whole. Also, the PCRF definition needs to be redefined by the PMP. To achieve this, the particle loss factors determined in this report together with the upcoming practical tests of the system with real engine emission by our project partners, will give valuable insight to define future legislations with the necessary accuracy.

5 Conclusion & Recommendations

Conclusion

In this report, it has been demonstrated, that a calibration procedure for sub-23 nm with a threshold of at least 10 nm particles (for CPC efficiency and system efficiency) measurements is feasible. This includes the adjustment of current legislation targets for 23 nm on-board systems to 10 nm on-board systems.

The C_0-factor evaluation, which is currently done at 200 nm does show compliance to PMP standards for the actual average from 30 nm, 50 nm and 100 nm. In addition, it has been shown, that the results of the extended VPR PCRF calibration in comparison to the laboratory system (from report D2.04) require further optimization of the equipment because the limit for 23 nm at 140 % and the limit for 15 nm at 160 % has been exceeded.

In conclusion the PEMs4Nano PEMS prototype build up has been finished and it is equipped with an optimized catalytic stripper and a 10 nm CPC, which has been described in the PEMs4Nano deliverable D2.05.

Recommendations

According to the performance of the measurement equipment, there are already a lot of recommendations proposed for the PEMs4Nano LabSystem which can be easily adapted to the PEMs4Nano PEMS. This contains the following points.

- Parallel measurements should be performed with the 10 nm PEMS and a 23 nm PEMS which gives the possibility to evaluate the difference in particle number concentration between 10 nm and 23 nm for different engines and/or exhaust systems, also offering the ability to correct line losses caused by diffusion for the PEMs4Nano modeling approach
- Effects from changes between 10 nm and 23 nm with respect to a small-time frame should be analyzed to probably detect smaller particle size distributions
- During transients of engine conditions, it might be possible to detect other particle formations at the 10 nm PN-counter which could be reproduced and analyzed with other analytical methods to gain the knowledge where these particles are coming from

In addition to these recommended tests, a correlation between Lab-System (either 10 nm or 23 nm) and PEMS (either 10 nm or 23 nm) could be performed either in an engine test bench, direct sampling from tailpipe at an emission chassis dyno or directly from the CVS tunnel.

Considering the PEMs4Nano PEMS development it has been recommended in D2.04 to further increase the catalytic stripper particle penetration (performed at UCAM). This has been done successfully and is shown in the results. However, there is still some optimization possible for further improvement. The focus of reducing particle losses in the system should not be only at the CS. In addition, the flows including the wiring can be optimized within the system.

The C_0-factor evaluation (VPR PCRF calibration method) should be adjusted like already recommended in D2.04 to a statistically based method according to prevailing modern engine concepts. The test results show in comparison to the laboratory system that there is a need for this on-board measurement system due to the increasing amount of particle losses by going down to 23 nm or 15 nm.

Considering the calibration and modification of the measurement equipment it can be recommended that the HORIBA system seems to be feasible with several modifications from 23 nm to 10 nm within a longer service interval. Therefore, an overlap in regulation from 23 nm to 10 nm is not recommended.

To achieve robust and reliable PN measurement devices it is recommended to have a certain description or regulation about how to generate particles and how they need to be thermally treated e. g. by using CAST aerosol (as there seems to be too many volatiles at the moment in the test setup for 10 nm) to fulfill more stringent targets in every calibration laboratory within the EU (World for the future).

6 References

[1] Global Registry; Created on 18 November 2004, pursuant to Article 6 of the Agreement concerning the establishing of global technical regulations for wheeled vehicles, equipment and parts which can be fitted and/or be used on wheeled vehicles (ECE/TRANS/132 and Corr.1) done at Geneva on 25 June 1998; Addendum 15: Global technical regulation No. 15; Worldwide harmonized Light vehicles Test Procedure; Established in the Global Registry on 12 March 2014

[2] EUROPEAN COMMISSION, "amending Regulation (EU) 2017/1151 supplementing Regulation (EC) No 715/2007 of the European Parliament and of the Council on type-approval of motor vehicles with respect to emissions from light passenger and commercial vehicles (Euro 5 and Euro 6) and on access to vehicle repair and maintenance information, amending Directive 2007/46/EC of the European Parliament and of the Council, Commission Regulation (EC) No 692/2008 and Commission Regulation (EU) No 1230/2012 and repealing Regulation (EC) No 692/2008 and Directive 2007/46/EC of the European Parliament and of the Council as regards real-driving emissions from light passenger and commercial vehicles (Euro 6)," draft ANNEXES 1 to 3, 2016.

[3] Source: L 175/708 Official Journal of the European Union 7.7.2017 EN; COMMISSION REGULATION (EU) 2017/1154 of 7 June 2017; "amending Regulation (EU) 2017/1151 supplementing Regulation (EC) No 715/2007 of the European Parliament and of the Council on type-approval of motor vehicles with respect to emissions from light passenger and commercial vehicles (Euro 5 and Euro 6) and on access to vehicle repair and maintenance information, amending Directive 2007/46/EC of the European Parliament and of the Council, Commission Regulation (EC) No 692/2008 and Commission Regulation (EU) No 1230/2012 and repealing Regulation (EC) No 692/2008 and Directive 2007/46/EC of the European Parliament and of the Council as regards real-driving emissions from light passenger and commercial vehicles (Euro 6)"

[4] A New On-Board PN Analyzer for Monitoring the Real Driving Condition; SAE - 2017-01-1001; Published 03/28/2017 Seyoung Kim, et. al.; Horiba Ltd.

[5] ISO 27891-2015: Aerosol particle number concentration – Calibration of condensation particle counters

[6] http://www.sootgenerator.com/CAST_principle.htm

[7] http://tsi.com/uploadedFiles/_Site_Root/Products/Literature/Spec_Sheets/3776_2980345.pdf

[8] https://www.palas.de/en/product/dnpdigital3000

7 Deviations from Annex 1

There are no deviations in terms of time or content.

8 Acknowledgement

The author(s) would like to thank the partners in the project for their valuable comments on previous drafts and for performing the review.

Project partners:

#	Type	Partner	Partner Full Name
1	IND	HORIBA	Horiba Europe GmbH
2	IND	Bosch	Robert Bosch GmbH
3	IND/SME	CMCL	Computational Modelling Cambridge Limited
4	IND	TSI	TSI GmbH
5	HE	UCAM	The Chancellor, Masters and scholars of the University of Cambridge
6	HE	ULL	Université des Sciences et Technologies De Lille – Lille I
7	IND	IDIADA	Idiada Automotive Technologie SA
8	IND	HORJY	Horiba Jobin Yvon S.A.S.
9	IND/SME	UNR	Uniresearch BV

This project has received funding from the European Union's Horizon2020 research and innovation programme under Grant Agreement no. 724145.

Appendix B – Abbreviations / Nomenclature

Table B-1 List of Abbreviations / Nomenclature.

Symbol / Shortname	
C	Concentration of Particles in #/cm³
C(0)	size independent loss correction factor for particles
CPC	Condensation Particle Counter
CS	Catalytic Stripper
CVS	Constant Volume Sampling
D(p)	Particle Diameter in nm
D(50)	Cut-Off size where 50 % of the particles are detected by the CPC
DMA	Differential Mobility Analyzer
E	Detection Efficiency in %
EFM	Exhaust Flow Meter
ET	Evaporation Tube
HEPA-filter	High Efficiency Particulate Air filter
OBS	on-board system
PCRF	Particle Count Reduction Factor
PEMS	Portable Emission Measurement System
PMP	Particle Measurement Programme
PN	Particulate Number
PNCS	particle number counting system
PND	Particle Number Diluter
RDE	real driving emission
SLPM	Standard Liters Per Minute (here: 20°C; 101,3 kPa)
UNECE	United Nations Economic Commission for Europe
UCAM	University of Cambridge
VPR	Volatile Particle Removal
WLTC	Worldwide harmonized Light Duty Test Cycle